FCR 90X-130X-200X

TECHNOPOLYMER IMPELLERS

Multi-stage centrifugal pumps

Clean water

Domestic use

Civil use

PERFORMANCE RANGE

- Flow rate up to **52.8 US g.p.m.** (12 m^3/h)
- Head up to **318 ft**

APPLICATION LIMITS

- Manometric suction lift up to **22.5 ft**
- Liquid temperature between **14 °F** and **104 °F**
- Ambient temperature up to **104 °F**
- Max. working pressure **10 bar**
- Continuous service **S1**

CONSTRUCTION AND SAFETY STANDARDS

EN 60335-1
IEC 60335-1
CEI 61-150

EN 60034-1
IEC 60034-1
CEI 2-3

CE

CERTIFICATIONS

Company with management system certified DNV
ISO 9001: QUALITY

INSTALLATION AND USE

Suitable for use with clean water and with liquids that are not chemically aggressive towards the materials from which the pump is made. As a result of their quietness these pumps are widely used in domestic applications such as the distribution of water in combination with small and medium sized pressure tanks, and for the irrigation of gardens and orchards, etc.
Installation needs to be undertaken in well ventilated closed areas or anyway protected from bad weather.

PATENTS - TRADE MARKS - MODELS

- Patent n. EP14755156.8

OPTIONS AVAILABLE ON REQUEST

- Pump body with NPT ANSI B 1.20.1 threaded ports
- Special mechanical seal
- Other voltages
- IPX5 class protection

GUARANTEE

2 years subject to terms and conditions

CHARACTERISTIC CURVES AND PERFORMANCE DATA

60 Hz **n= 3450 min^{-1}** HS= 0 ft

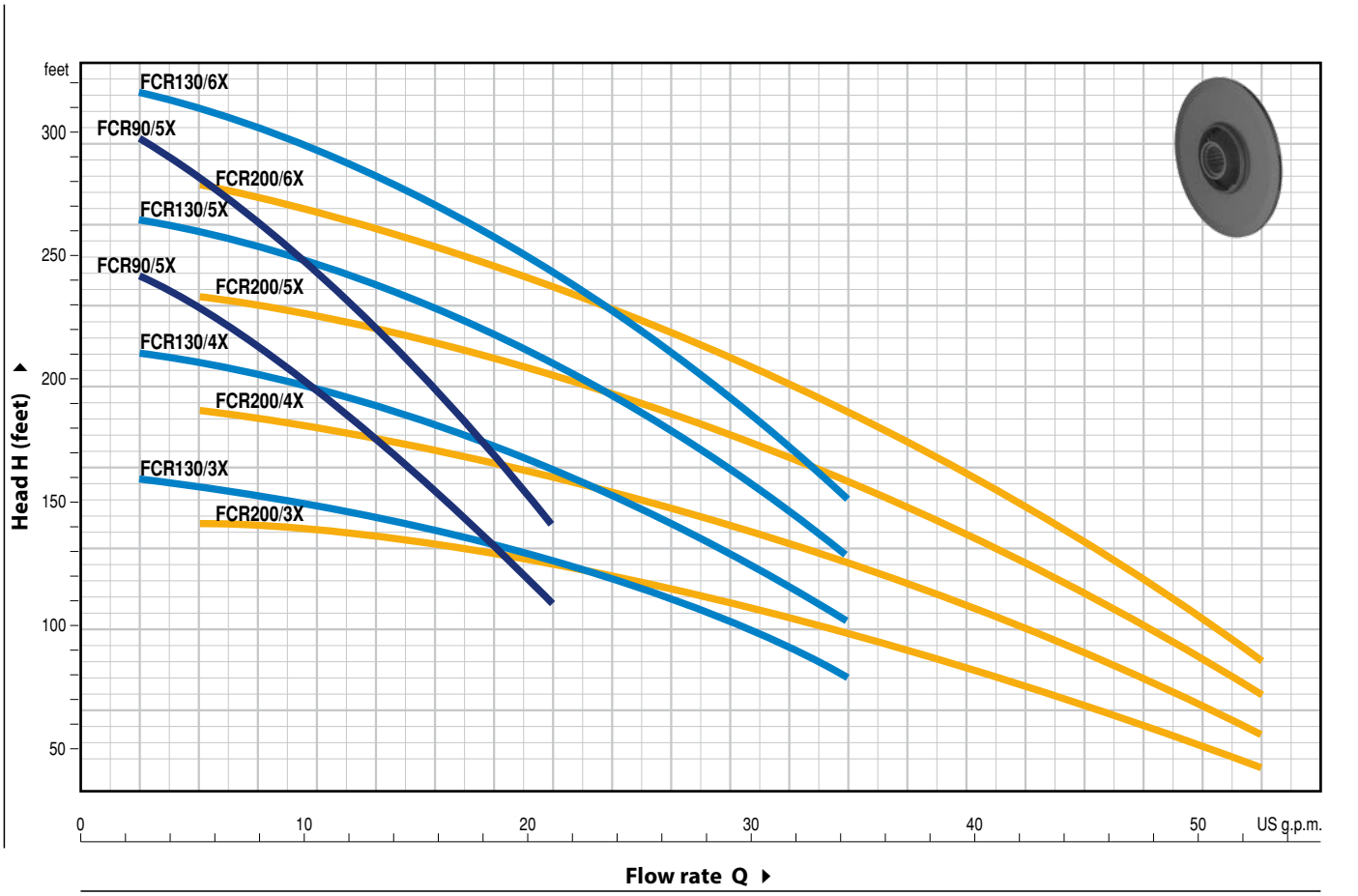

MODEL		POWER (P2)			Q	0	1.3	2.6	5.3	10.6	15.9	21.1	26.5	34.4	37	42.3	47.5	52.8
Single-phase	Three-phase	kW	HP	▲	US g.p.m.													
FCRm 90/5X	**FCR 90/5X**	1.1	1.5	IE3	H feet	249	249	241	229.5	198.5	154	108.5						
FCRm 90/6X	**FCR 90/6X**	1.5	2			305	305	297	282	244.5	139.5	141.5						
FCRm 130/3X	**FCR 130/3X**	1.1	1.5			160.5	160.5	159	156.5	147.5	64	126.5	110	79				
FCRm 130/4X	**FCR 130/4X**	1.5	2			213	213	210	206.5	197	183.5	164	141	102				
FCRm 130/5X	**FCR 130/5X**	1.8	2.5			265.5	265.5	264	259	246	229.5	205	177	128				
–	**FCR 130/6X**	2.2	3			318	318	316.5	310	295.5	272.5	244.5	210	151				
FCRm 200/3X	**FCR 200/3X**	1.1	1.5			144	142.5	142.5	141	138	133	124.5	115	95	90	75.5	59	43
FCRm 200/4X	**FCR 200/4X**	1.5	2			190	188.5	188.5	187	180.5	172	162.5	147.5	124.5	116.5	98.5	78.5	58
FCRm 200/5X	**FCR 200/5X**	1.8	2.5			239.5	236	234.5	233	226.5	215	203.5	187.5	157.5	146	124.5	98.5	72.5
–	**FCR 200/6X**	2.2	3			285	282	280.5	274	269	256	239.5	220	187	174	147.5	118	85.5

Q = Flow rate **H** = Total manometric head **HS** = Suction height

Tolerance of characteristic curves in compliance with EN ISO 9906 Grade 3B.

▲ Three-phase motor efficiency class (IEC 60034-30-1)

FCR 90X-130X-200X

POS.	COMPONENT	CONSTRUCTION CHARACTERISTICS
1	**PUMP BODY**	Stainless steel AISI 304 complete with threaded ports in compliance with ISO 228/1
2	**BODY BACKPLATE**	Stainless steel AISI 304
3	**IMPELLERS**	Noryl
4	**DIFFUSERS**	Stainless steel AISI 304
5	**MOTOR SHAFT**	Stainless steel AISI 431

6 MECHANICAL SEAL

Seal	*Shaft*	*Materials*		
Model	***Diameter***	*Stationary ring*	*Rotational ring*	*Elastomer*
FN-18	**Ø 18** mm	Graphite	Ceramic	NBR

7 BEARINGS — **6304 2RS - C3 / 6204 ZZ - C3E**

8 CAPACITOR

Pump	***Capacitance***	
Single-phase	***(220 V)***	***(110 V)***
FCRm 90/5X **FCRm 130/3X** **FCRm 200/3X**	**31.5** µF - 450 VL	**60** µF - 250 VL
FCRm 90/6X **FCRm 130/4X** **FCRm 200/4X**	**45** µF - 450 VL	**80** µF - 250 VL
FCRm 130/5X **FCRm 200/5X**	**50** µF - 450 VL	**–**

9 ELECTRIC MOTOR

FCRm: single-phase 220 V - 60 Hz with thermal overload protector incorporated into the winding.
FCR: three-phase 220/440 V - 60 Hz.

➠ **The three-phase pumps are fitted with high performance motors in class IE3 (IEC 60034-30-1)**

– Insulation: class F
– Protection: IP X4

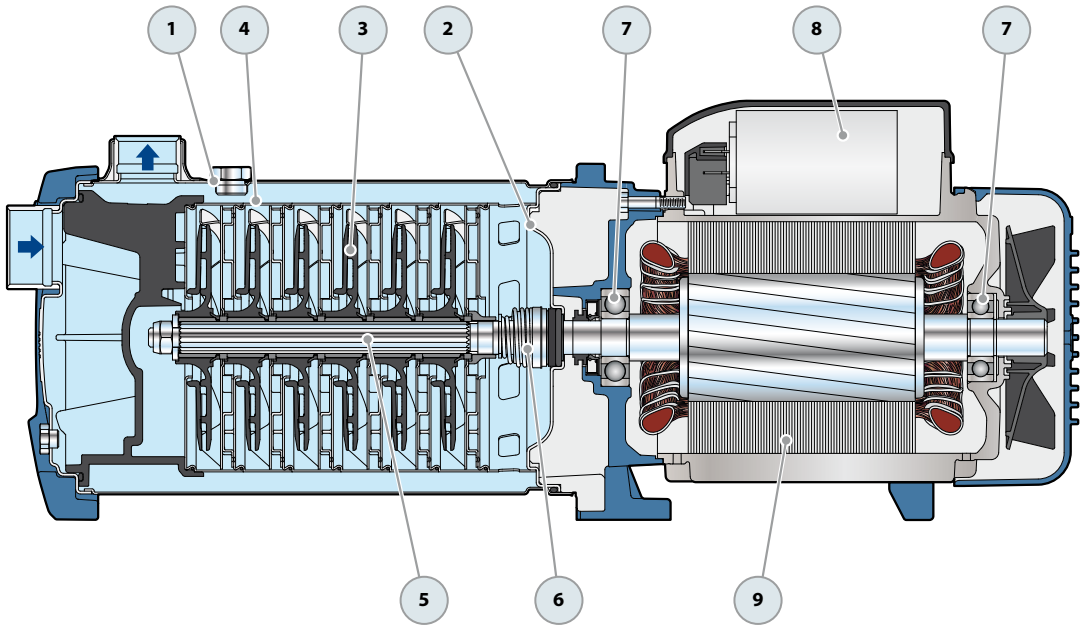

DIMENSIONS AND WEIGHT

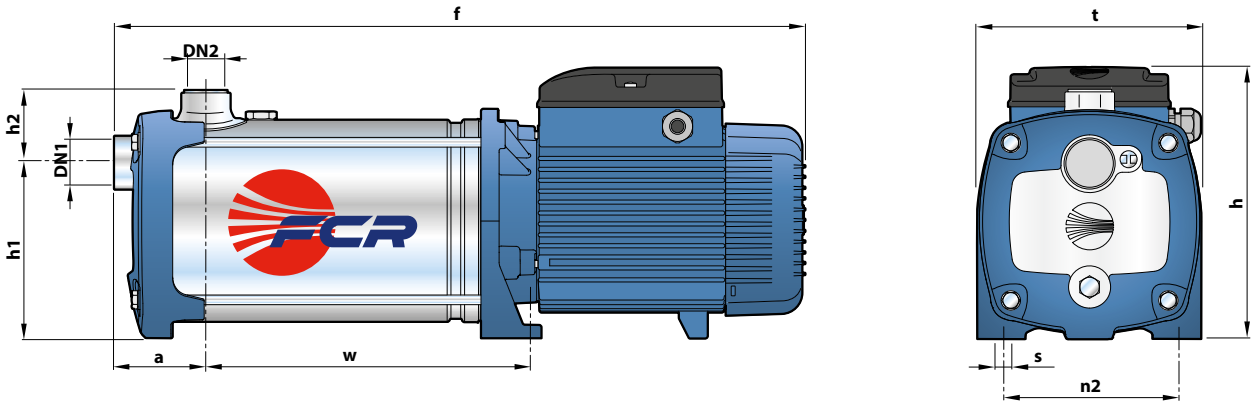

MODEL		PORTS		DIMENSIONS mm									lbs	
Single-phase	**Three-phase**	**DN1**	**DN2**	a	f	h	h1	h2	t	n2	w	s	1~	3~
FCRm 90/5X	**FCR 90/5X**				549						243		**43.0**	**43.0**
FCRm 90/6X	**FCR 90/6X**				575						269		**47.2**	**44.6**
FCRm 130/3X	**FCR 130/3X**				497						191		**39.5**	**39.7**
FCRm 130/4X	**FCR 130/4X**				523						217		**43.7**	**43.7**
FCRm 130/5X	**FCR 130/5X**	**1¼"**	**1"**	75	570	228	145	59	185	145	243	11	**51.0**	**52.3**
–	**FCR 130/6X**				595						269		–	**53.0**
FCRm 200/3X	**FCR 200/3X**				497						191		**39.5**	**39.7**
FCRm 200/4X	**FCR 200/4X**				523						217		**43.9**	**43.7**
FCRm 200/5X	**FCR 200/5X**				569						243		**51.2**	**52.3**
–	**FCR 200/6X**				595						269		–	**53.0**

ABSORPTION

MODEL	VOLTAGE	
Single-phase	220 V	110 V
FCRm 90/5X	**9.3** A	**18.5** A
FCRm 90/6X	**11.0** A	**22.0** A
FCRm 130/3X	**8.5** A	**17.0** A
FCRm 130/4X	**11.0** A	**22.0** A
FCRm 130/5X	**13.0** A	**26.0** A
FCRm 200/3X	**8.6** A	**17.2** A
FCRm 200/4X	**11.0** A	**22.0** A
FCRm 200/5X	**13.0** A	**26.0** A

MODEL	VOLTAGE	
Three-phase	220 V	440 V
FCR 90/5X	**5.5** A	**3.5** A
FCR 90/6X	**7.0** A	**4.0** A
FCR 130/3X	**5.2** A	**3.2** A
FCR 130/4X	**5.5** A	**3.5** A
FCR 130/5X	**8.3** A	**4.8** A
FCR 130/6X	**9.6** A	**5.6** A
FCR 200/3X	**5.5** A	**3.5** A
FCR 200/4X	**7.0** A	**4.0** A
FCR 200/5X	**8.3** A	**4.8** A
FCR 200/6X	**9.6** A	**5.6** A